Wildlife Friendly Plain Round LED Bulkhead in White

Model: LJW6051-WH

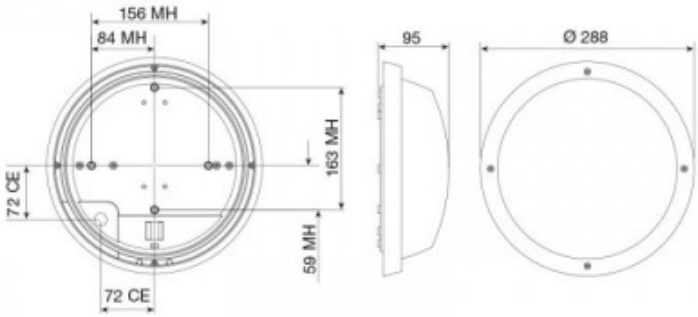

DIMENSIONS

- 288mm diameter x 95mm depth

TECHNICAL DATA

Total lumens: 300

Colour temp: Wildlife 590nm

Power supply: 220-240V, Double Insulated

CRI: 11

Wattage: 15

Control gear: Included

FEATURES

- This light is Wildlife Friendly- emiting a very narrow 590nm wave length of light which is invisable to wildlife. perfect for protected wildlife habitats, bush, rural and coastal areas where wildlife is abundant as it does not disturb the surrounding wildlife in the area.
- Read more about Wildlife Friendly Lighting here in our blog articles.
- Genuine lexan polycarbonate base and diffuser
- UV stabilised, & supplied with stainless steel screws- 10 Year Anti-Corrosion Guarantee
- Impact resistance rating IK10
- New Zealand & Australian registered® designs
- Made in New Zealand

SPECIFICATIONS

Material: Polycarbonate

Lamp included: Yes

Number of lamps: 1

IP Rating: IP55

Technology field: LED

Indoor / Outdoor: Indoor, Outdoor

Mounting type: Ceiling, Wall

Colour: White